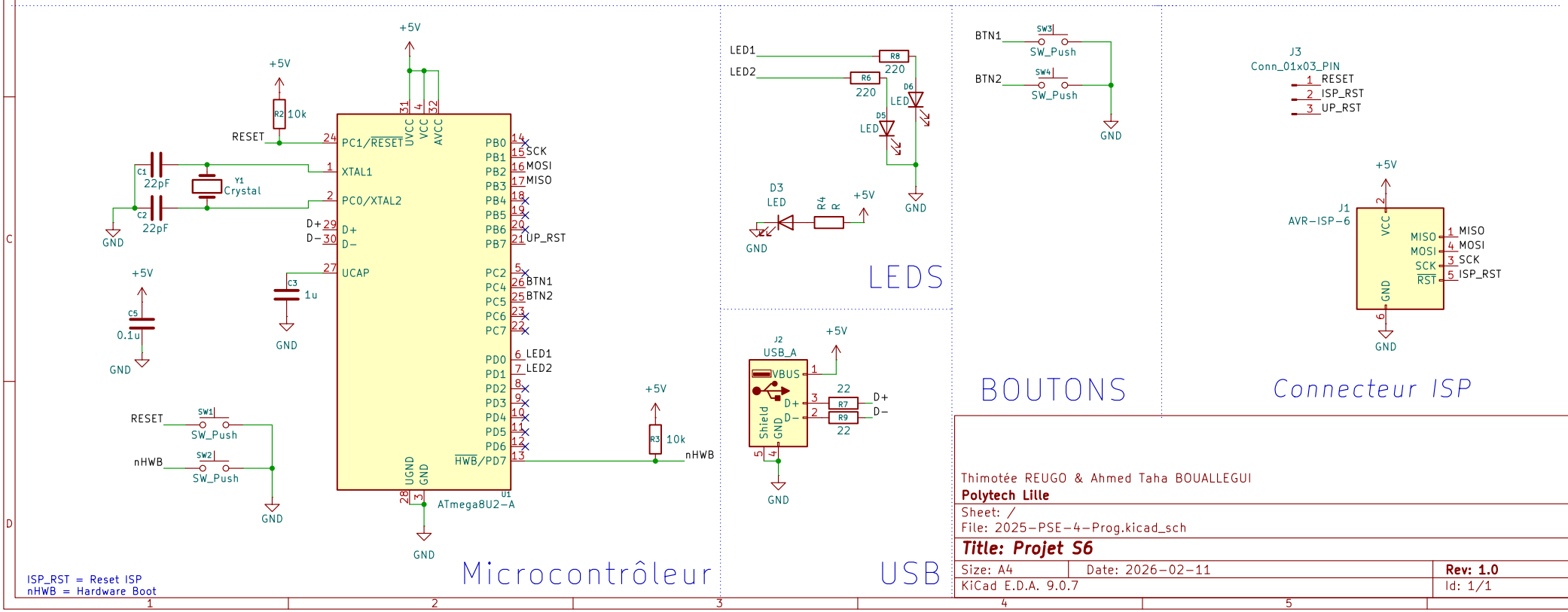

Thimotée REUGO & Ahmed Taha BOUALLEGUI
Polytech Lille

Sheet: /
File: 2025-PSE-4-Prog.kicad_sch

Title: Projet S6

Size: A4	Date: 2026-02-11	**Rev: 1.0**
KiCad E.D.A. 9.0.7		Id: 1/1