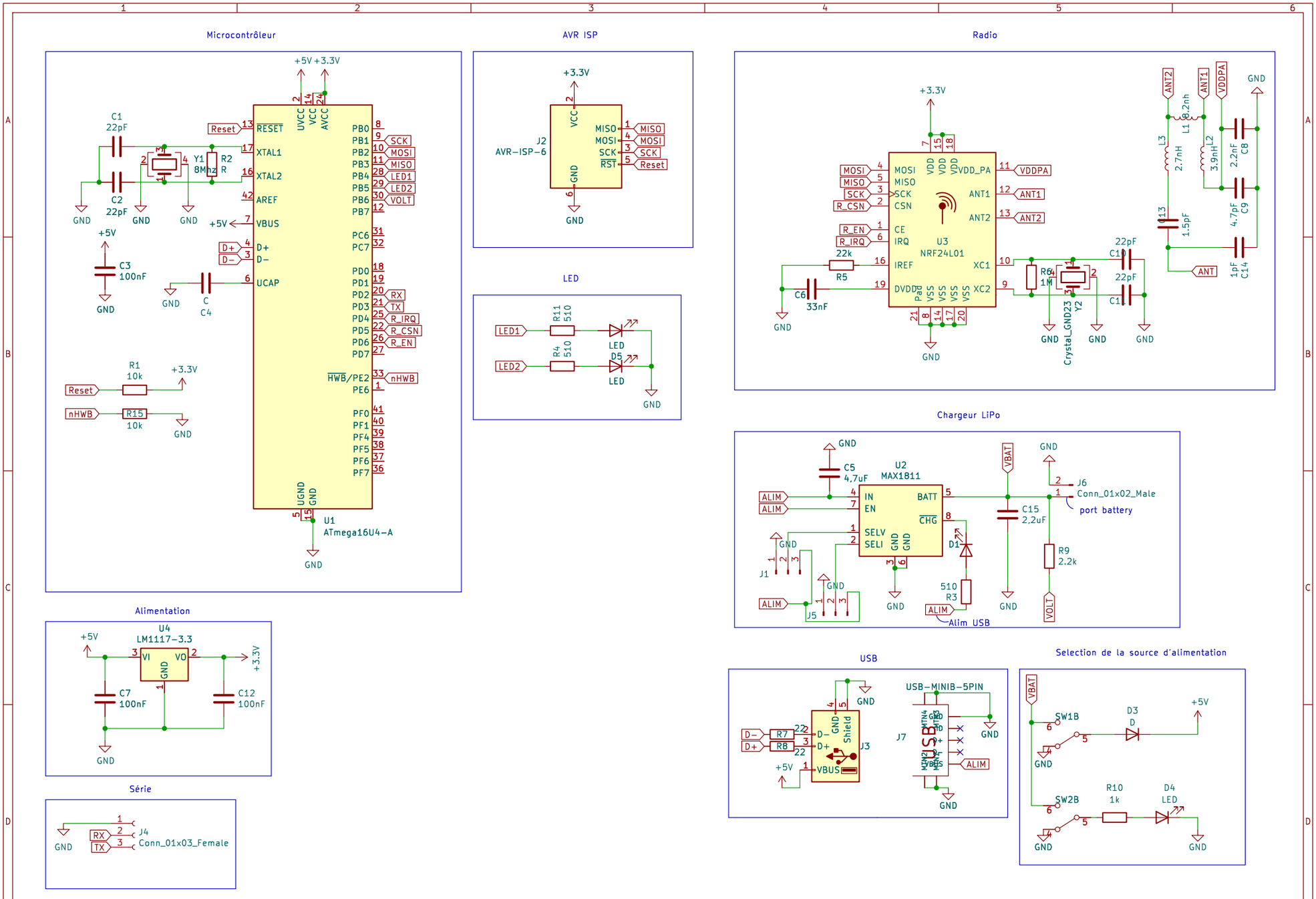

CARIAT Camille & BONNINGRE Louis

Sheet: /

File: tired.kicad_sch

Title: Tired Sensor v0.1

Size: User	Date: 2024-03-19	Rev: Alpha
KiCad E.D.A. kicad 7.0.11		Id: 1/1